Dart Aerospace Ltd.
1270 Aberdeen St
Hawkesbury, ON
K6A 1K7
Canada

Tel (613) 632-5200
Fax 613 632-5246

D135-751-011
Job Sheet 200909

Part No: D135-751-011 **Job Qty:** 1 pcs
Part Name: Skidtube with Standard Wearplates Fits LH or RH

Part Weight: 0 lbs **Status:** New **Priority:** Medium
Job Created: 9/19/19 **Job Tracking No:**
Due Date: 10/16/19 **Created By:** Marie Lajeunesse
Type: SOLD **Description:** ORDER 19679

Note: DWG DSI 9661 REV A, D3507 REV D IPP Rev:A 44353 New Issue JLM IPP Rev:B 06-12-18 As per Rev B JLM IPP Rev:C 07-12-11 ECN 1036 as per revB DD IPP Rev D 08.11.04 Added DT9431 to sequence 5 EC verf DD IPP Rev E 10.02.22 per PAR 09-043 EC verified: DD IPP Rev:F 10.06.09 remove seq110 DD verf:EC IPP Rev G 10.09.17 added D3507-1-bent EC verified:DD IPP REV:H 13.12.11 ECN13-619/ CHG002 DD VERF:JLM

Ship Via:

Bill of Materials

Job Routing

Op No	Operation	Qty	Start Date	Due Date	Standard Setup Hrs	Standard Run Hrs	Workcenter/Supplier	Lead Time	Sign-off
120	**Skidtubes - 1**	1 pcs		10/16/19	0.00	0.80	Skidtubes - 1 - B4B		
							Skidtubes - 2 - B4B		
							Skidtubes - 3 - B4B		
							Skidtubes - 4 - B4B		
							Skidtubes - 5 - B4B		
							Skidtubes - 6 - B4B		
							Skidtubes - 7 - B4B		
140	**QC 5**	1 pcs		10/16/19	0.00	0.00	QC 5 - 10		
							QC 5 - 12		
							QC 5 - 17		
							QC 5 - 18		
							QC 5 - 19		
							QC 5 - 22		
							QC 5 - 24		
							QC 5 - 3		
							QC 5 - 43		
							QC 5 - 49		
							QC 5 - 51		
							QC 5 - 58		DAS
							QC 5 - 68		OCT 0 3 2019 68
							QC 5 - 9		9-89
							QC 5 - 50		
							QC 5 - 30		
							QC 5 - 40		
							QC 5 - 61		
							QC 5 - 81		
150	**Handfinish - 1-1 Chemical-B4B**	1 pcs		10/16/19	0.00	0.33	Handfinish - 1 - 1 - B4B		

DART AEROSPACE
Dart Aerospace Ltd.
1270 Aberdeen Street
Hawkesbury, ON K64 1K7
CANADA
TEL.: 1 613 632 – 5200
Email: sales@darteero.com
www.darteerospace.com

Container No: S219258
Part: D135 – 751 – 011
Job No: 200909
Serial No/Batch: S219258
Revision:
Inspector:
Exp Date:
Instructions: FAA STC SR01709SE 18/10/17 TC LoA RDIMS

Plex 9/19/19 9:36 AM Dart.lajeunesse.marie

				Handfinish - 1 - 2 - B4B	
				Handfinish - 1 - 3 - B4B	OCT 04 2019
				Handfinish - 1 - 4 - B4B	
				Handfinish - 1 - 5 - B4B	
				Handfinish - 1 - 6 - B4B	
				Handfinish - 1 - 7 - B4B	
				Handfinish - 1 - 8 - B4B	
				Handfinish - 1 - 9 - B4B	
				Handfinish - 1 - 10 - B4B	
				Handfinish - 1 - 11 - B4B	
				Handfinish - 1 - 12 - B4B	
				Handfinish - 1 - 13 - B4B	
				Handfinish - 1 - 14 - B4B	
				Handfinish - 1 - 15 - B4B	
				Handfinish - 1 - 16 - B4B	
				Handfinish - 1 - 17 - B4B	
				Handfinish - 1 - 18 - B4B	
				Handfinish - 1 - 19 - B4B	
				Handfinish - 1 - 20 - B4B	
				Handfinish - 1 - 21 - B4B	
				Handfinish - 1 - 22 - B4B	
160 **QC 7**	1 pcs	10/16/19	0.00 0.00	QC 7 - 10	
				QC 7 - 13	
				QC 7 - 14	
				QC 7 - 15	
				QC 7 - 17	
				QC 7 - 18	
				QC 7 - 19	
				QC 7 - 2	
				QC 7 - 28	
				QC 7 - 3	
				QC 7 - 30	
				QC 7 - 34	
				QC 7 - 36	
				QC 7 - 37	
				QC 7 - 41	
				QC 7 - 47	
				QC 7 - 48	
				QC 7 - 51	
				QC 7 - 58	
				QC 7 - 59	
				QC 7 - 60	

				QC 7 - 9	
				QC 7 - 68	
				QC 7 - 50	
				QC 7 - 67	
				QC 7 - 40	
				QC 7 - 24	
				QC 7 - 43	
				QC 7 - 61	
				QC 7 - 81	
				QC 7 - ~~76~~ 79	ND
170	**Skidtubes - 2 - B4B**	1 pcs	10/16/19 TF	0.00 1.00 1:20:00	Skidtubes - 1 - B4B
					Skidtubes - 2 - B4B
					Skidtubes - 3 - B4B
					Skidtubes - 4 - B4B TF
				24K 18	Skidtubes - 5 - B4B BE
					Skidtubes - 6 - B4B
					Skidtubes - 7 - B4B
180	**QC 10**	1 pcs	10/16/19	0.00 0.00	QC 10 - 10
					QC 10 - 18
					QC 10 - 24 DAS 68 9-00
					QC 10 - 43
					QC 10 - 50 OCT 10 2019
					QC 10 - 58
					QC 10 - 9
185	**Handfinish - 6-1- Touch Up- B4B**	1 pcs	10/16/19	0.00 0.10	Handfinish - 6 - 1 - B4B
					Handfinish - 6 - 2 - B4B
					Handfinish - 6 - 3 - B4B
					Handfinish - 6 - 4 - B4B
					Handfinish - 6 - 5 - B4B
					Handfinish - 6 - 6 - B4B
					Handfinish - 6 - 7 - B4B
					Handfinish - 6 - 8 - B4B
					Handfinish - 6 - 9 - B4B
					Handfinish - 6 - 10 - B4B BE 19-10-16
					Handfinish - 6 - 11 - B4B
					Handfinish - 6 - 12 - B4B
					Handfinish - 6 - 13 - B4B
					Handfinish - 6 - 14 - B4B
					Handfinish - 6 - 15 - B4B
					Handfinish - 6 - 16 - B4B
					Handfinish - 6 - 17 - B4B
					Handfinish - 6 - 18 - B4B
					Handfinish - 6 - 19 - B4B
					Handfinish - 6 - 20 -

				B4B	
				Handfinish - 6 - 21 - B4B	
				Handfinish - 6 - 22 - B4B	
187 **QC 7**	1 pcs	10/16/19	0.00 0.00	QC 7 - 10	
				QC 7 - 13	
				QC 7 - 14	
				QC 7 - 15	
				QC 7 - 17	
				QC 7 - 18	BE
				QC 7 - 19	
				QC 7 - 2	
				QC 7 - 28	
				QC 7 - 3	
				QC 7 - 30	
				QC 7 - 34	
				QC 7 - 36	
				QC 7 - 37	
				QC 7 - 41	
				QC 7 - 47	
				QC 7 - 48	
				QC 7 - 51	
				QC 7 - 58	
				QC 7 - 59	
				QC 7 - 60	
				QC 7 - 9	
				QC 7 - 68	
				QC 7 - 50	
				QC 7 - 67	
				QC 7 - 40	
				QC 7 - 24	
				QC 7 - 43	
				QC 7 - 61	
				QC 7 - 81	
				QC 7 - 76	
190 **Skidtubes - 3 - B4B**	1 pcs	10/16/19	0.00 0.77	Skidtubes - 1 - B4B	
				Skidtubes - 2 - B4B	
				Skidtubes - 3 - B4B	
				Skidtubes - 4 - B4B	
				Skidtubes - 5 - B4B	BE
				Skidtubes - 6 - B4B	
				Skidtubes - 7 - B4B	
200 **QC 5**	1 pcs	10/16/19	0.00 0.00	QC 5 - 10	
				QC 5 - 12	
				QC 5 - 17	
				QC 5 - 18	
				QC 5 - 19	
				QC 5 - 22	
				QC 5 - 24	
				QC 5 - 3	
				QC 5 - 43	
				QC 5 - 49	
				QC 5 - 51	
				QC 5 - 58	DAS
				QC 5 - 68	OCT 11 2019 68
				QC 5 - 9	9-89
				QC 5 - 50	
				QC 5 - 30	

					QC 5 - 40	
					QC 5 - 61	
					QC 5 - 81	
210	**Handfinish - 2-1 Pressure-B4B**	1 pcs	10/16/19	0.00 0.08	Handfinish - 2 - 1 - B4B	
					Handfinish - 2 - 2 - B4B	OCT 16 2019
					Handfinish - 2 - 3 - B4B	
					Handfinish - 2 - 4 - B4B	DAS
220	**Spray Paint - 2 - B4B**	1 pcs	10/16/19	0.00 0.25	Spray Paint - 1 - B4B	41 OCT 16 2019
					Spray Paint - 2 - B4B	9-89
					Spray Paint - 3 - B4B	
					Spray Paint - 4 - B4B	
225	**QC 14**	1 pcs	10/16/19	0.00 0.00	QC 14 - 15	
					QC 14 - 2	
					QC 14 - 34	
					QC 14 - 41	
					QC 14 - 51	
					QC 14 - 58	
					QC 14 - 59	BEB 19-10-17.
					QC 14 - 9	
					QC 14 - 68	
					QC 14 - 40	
					QC 14 - 19	
					QC 14 - 43	
					QC 14 - 24	
					QC 14 - 61	
					QC 14 - 81	
260	**Handfinish - 4-1-Assembly-B4B**	1 pcs	10/16/19	0.00 0.74	Handfinish - 4 - 1 - B4B	
					Handfinish - 4 - 10 - B4B	
					Handfinish - 4 - 11 - B4B	
					Handfinish - 4 - 12 - B4B	
					Handfinish - 4 - 13 - B4B	
					Handfinish - 4 - 14 - B4B	
					Handfinish - 4 - 15 - B4B	
					Handfinish - 4 - 2 - B4B	
					Handfinish - 4 - 3 - B4B	
					Handfinish - 4 - 4 - B4B	
					Handfinish - 4 - 5 - B4B	
					Handfinish - 4 - 6 - B4B	
					Handfinish - 4 - 7 - B4B	
					Handfinish - 4 - 8 - B4B	
					Handfinish - 4 - 9 - B4B	
270	**QC 5**	1 pcs	10/16/19	0.00 0.00	QC 5 - 10	
					QC 5 - 12	
					QC 5 - 17	

DAS 59 9-89

				QC 5 - 18	
				QC 5 - 19	
				QC 5 - 22	
				QC 5 - 24	
				QC 5 - 3	
				QC 5 - 43	
				QC 5 - 49	
				QC 5 - 51	
				QC 5 - 58	
				QC 5 - 68	
				QC 5 - 9	
				QC 5 - 50	DAS
				QC 5 - 30	40
				QC 5 - 40	OCT 2 1 2019 9-89
				QC 5 - 61	
				QC 5 - 81	
280 **Packaging 1-1 - Pick Kit - B4B**	1 pcs	10/16/19	0.00 0.00	Packaging 1 - 1 - B4B	
				Packaging 1 - 2 - B4B	
				Packaging 1 - 3 - B4B	
				Packaging 1 - 4 - B4B	
				Packaging 1 - 5 - B4B	
				Packaging 1 - 6 - B4B	
				Packaging 1 - 7 - B4B	
				Packaging 1 - 8 - B4B	
				Packaging 1 - 9 - B4B	
				Packaging 1 - 10 - B4B	
				Packaging 1 - 11 - B4B	
				Packaging 1 - 12 - B4B	
				Packaging 1 - 13 - B4B	
				Packaging 1 - 14 - B4B	
				Packaging 1 - 15 - B4B	
				Packaging 1 - 16 - B4B	
				Packaging 1 - 17 - B4B	
				Packaging 1 - 18 - B4B	
				Packaging 1 - 19 - B4B	
				Packaging 1 - 20 - B4B	
				Packaging 1 - 21 - B4B	
				Packaging 1 - 22 - B4B	
				Packaging 1 - 23 - B4B	PC
				Packaging 1 - 24 - B4B	
				Packaging 1 - 25 - B4B	
				Packaging 1 - 26 - B4B	
				Packaging 1 - 27 - B4B	
				Packaging 1 - 28 - B4B	
				Packaging 1 - 29 - B4B	
				Packaging 1 - 30 - B4B	
				Packaging 1 - 31 - B4B	
				Packaging 1 - 32 - B4B	
				Packaging 1 - 33 - B4B	
				Packaging 1 - 34 - B4B	
				Packaging 1 - 35 - B4B	
				Packaging 1 - 36 - B4B	
290 **QC 4**	1 pcs	10/16/19	0.00 0.00	QC 4 - 28	
				QC 4 - 58	
				QC 4 - 69	
				QC 4 - 9	
				QC 4 - 46	
				QC 4 - 68	
				QC 4 - 72	

				QC 4 - 74	DAS 78 9-89 OCT 2 2 2019
				QC 4 - 75	
300 **Packaging 3-1 - Stock - B4B**	1 pcs	10/16/19	0.00 0.00	Packaging 3 - 1 - B4B	
				Packaging 3 - 2 - B4B	
				Packaging 3 - 3 - B4B	
				Packaging 3 - 4 - B4B	
				Packaging 3 - 5 - B4B	
				Packaging 3 - 6 - B4B	
				Packaging 3 - 7 - B4B	
				Packaging 3 - 8 - B4B	
				Packaging 3 - 9 - B4B	
				Packaging 3 - 10 - B4B	
				Packaging 3 - 11 - B4B	
				Packaging 3 - 12 - B4B	
				Packaging 3 - 13 - B4B	
				Packaging 3 - 14 - B4B	
				Packaging 3 - 15 - B4B	
				Packaging 3 - 16 - B4B	
				Packaging 3 - 17 - B4B	
				Packaging 3 - 18 - B4B	
				Packaging 3 - 19 - B4B	
				Packaging 3 - 20 - B4B	
				Packaging 3 - 21 - B4B	
				Packaging 3 - 22 - B4B	
				Packaging 3 - 23 - B4B	
				Packaging 3 - 24 - B4B	DAS 78 9-89 OCT 2 2 2019
				Packaging 3 - 25 - B4B	
				Packaging 3 - 26 - B4B	
				Packaging 3 - 27 - B4B	
				Packaging 3 - 28 - B4B	
				Packaging 3 - 29 - B4B	
				Packaging 3 - 30 - B4B	
				Packaging 3 - 31 - B4B	
				Packaging 3 - 32 - B4B	
				Packaging 3 - 33 - B4B	
				Packaging 3 - 34 - B4B	
				Packaging 3 - 35 - B4B	
				Packaging 3 - 36 - B4B	
305 **DC - 1 - B4B**	1 pcs	10/16/19	0.00 0.00	DC - 1 - B4B	DAS 21 9-89 OCT 2 2 2019
				DC - 2 - B4B	
310 **QC 21 - FG**	1 pcs	10/16/19	0.00 0.00	QC 21 - FG - 21	
				QC 21 - FG - 70	
				QC 21 - FG - 53	DAS 21 9-89 OCT 2 2 2019

FG Dock

Part Op Descriptions: **120** - 1-Cut Aft end as per dwg D3507 3-Drill Aft & Fwd Cap holes using DT8678 & DT8901 4-Locate DT8870 & Drill Ground wire hole on top of Tube. 6-Locate DT8870 with #30 cleco in Ground wire hole ,then Pilot Drill all X-Bolt holes using #30" drill.****DO NOT OPEN AFT CAP HOLES***** 7-Open crossbolt holes to 0.3125" (3 per side). Drill pilot holes for wearplates using Dt8868,Use DT8892 FOR REAR WEARPLATE HOLES. 8-Open six rear wearplate holes using DT8892.Open all wearplate holes to 0.297" 9-Open ground wire hole .297" section E-E 10-Open Aft & Fwd Cap holes using .208" drill. 11-Bore out aft end of tube as per Dwg D3507 & Detail "B". 12- Section G-G holes must be laid out manually, open to #30. 13-Deburr holes. AIR m138989

Sikaflex S2006 25 exp 07,25,20

140 - (QC5- Inspect part completeness to step on W/O)
160 - (QC7-Inspect Chemical Conversion Coat)
170 - 1-Open X-Bolt holes to .375"(1 Places) & .500"(2Places) as per Dwg D3507. and section G-G to .750" (2 places) 2-Counter Sink X-BOLT holes as per Dwg D3507 3-Deburr and blow out chips from inside of tube. 4-Bond web as per Dwg D3507 & QSI 015 start time : 10:00am Oct,8 end time: 10:00pm Oct,8 5-Weld x-bolt spacers as per Dwg D3507 and Detail C-C & D-D and G-G 7-Drill Rivet Holes as per Dwg D3507 Using Dt8871A&B 8-Deburr Rivet holes.
180 - (QC10- Inspect visual per QSI004- ground welds)
185 - (Touch up alodine) RE-ALODINE ONLY
187 - (QC7-Inspect Chemical Conversion Coat)
190 - 1-Rivet D3506-1/-3 as per Dwg D3507.
200 - (QC5- Inspect part completeness to step on W/O)
210 - Touch-up alodine tube as per QSI 005 section 4.1.2.1 do not acid etch.

220 - (Spray Paint / NDT Room) 1- Apply Primer as per QSI 005 4.2.1.3.3 and dwg A/R Primer
Batch: 5200299 2- Paint two coats of White paint as per QSI 005 4.2 and dwg A/R Paint
Batch: 5213125
225 - (QC14- Inspect Spray Paint)
260 - 1- Install Wearplate &Ground Wire inserts as per Dwg D3507. 1-Inspect for Foreign objects 2-Install Fwd & Aft caps as per Dwg D3507 And Detail "A" & "B" 3-Install Wearplates as per Dwg D3507 , Note:Install (1) Bolt and (1) washer on Ground Wire insert on top of tube Do not Install Scews where indicated on Dwg(Note #6) 4-assemble o'ring to plug as per dwg D3492 and apply o'ring lube 5- Wing Walk as per Dwg D3507 and QSI 005 4.4 Batch:_____
270 - (QC5- Inspect part completeness to step on W/O)
280 - (Pick Kit)
290 - (QC4- 100% Inspect kits for completeness)
300 - (Identify as per dwg & Stock Location:_____) Identify and pack for shipping as per PPP D135-751-011 PPP Rev:_____
305 - Photocopy bluefile & type labels per PPP D135-751-011 CHG002
310 - QC21- Final Inspection - Work Order Release

012558

Job BOM

Part / Item	Component Name	Quantity	Operation	Container
D3507-1-BENT	Skidtube Assembly EC135	1 pcs (1 ea)	120-Skidtubes - 1	5166847
D3504-1	Crossbolt Spacer	2 pcs (2 ea)	170-Skidtubes - 2 - B4B	5146029
D3504-3	Crossbolt Spacer	1 pcs (1 ea)	170-Skidtubes - 2 - B4B	B1056C4
D3504-5	Crossbolt Spacer	2 pcs (2 ea)	170-Skidtubes - 2 - B4B	5091959
D3505-1	Web	1 pcs (1 ea)	170-Skidtubes - 2 - B4B	5154735
D3506-1	Doubler	4 pcs (4 ea)	190-Skidtubes - 3 - B4B	5149088
D3506-3	Doubler	2 pcs (2 ea)	190-Skidtubes - 3 - B4B	5154442
MS20601-AD4W3	Rivet	12 Ea (12 ea)	190-Skidtubes - 3 - B4B	5214592
ALS4-1032-225	Rivnut	1 Ea (1 ea)	260-Handfinish - 4-1-Assembly-B4B	5198155
ALS7-1032-130	Rivnut	38 Ea (38 ea)	260-Handfinish - 4-1-Assembly-B4B	5190021
AN3C4A	Bolt	31 Ea (31 ea)	260-Handfinish - 4-1-Assembly-B4B	5218780
AN3C5A	Bolt	2 Ea (2 ea)	260-Handfinish - 4-1-Assembly-B4B	5216219.
AN526C1032R10	Screw	2 Ea (2 ea)	260-Handfinish - 4-1-Assembly-B4B	5166981
D2965	Cap	1 pcs (1 ea)	260-Handfinish - 4-1-Assembly-B4B	5166510
D2965-3	Cap	1 pcs (1 ea)	260-Handfinish - 4-1-Assembly-B4B	5166571
D3492-1	Plug	4 pcs (4 ea)	260-Handfinish - 4-1-Assembly-B4B	5204549.
D3492-3	Plug	4 pcs (4 ea)	260-Handfinish - 4-1-Assembly-B4B	5215332.
D3492-7	Plug	2 pcs (2 ea)	260-Handfinish - 4-1-Assembly-B4B	5148611
D4918-047	Wearplate Aft	1 pcs (1 ea)	260-Handfinish - 4-1-Assembly-B4B	5153202.
D4918-1	Wearplate Fwd	1 pcs (1 ea)	260-Handfinish - 4-1-Assembly-B4B	5220080
D4918-3	Wearplate Center Fwd	1 pcs (1 ea)	260-Handfinish - 4-1-Assembly-B4B	5170023
D4918-5	Wearplate Center Aft	1 pcs (1 ea)	260-Handfinish - 4-1-Assembly-B4B	5170026.
NAS1149C0332R	Washer (AN960C10L)	33 Ea (33 ea)	260-Handfinish - 4-1-Assembly-B4B	5218154.
NAS1611-007	O-Ring	2 Ea (2 ea)	260-Handfinish - 4-1-Assembly-B4B	E103697.
NAS1611-010	O-Ring	4 Ea (4 ea)	260-Handfinish - 4-1-Assembly-B4B	5057658.
NAS1611-013	O-Ring	4 Ea (4 ea)	260-Handfinish - 4-1-Assembly-B4B	5217822.
AN3C4A	Bolt	8 Ea (8 ea)	280-Packaging 1-1 - Pick Kit - B4B	5090638
D3512-041	Wearplate	2 pcs (2 ea)	280-Packaging 1-1 - Pick Kit - B4B	5220936
NAS1149C0332R	Washer (AN960C10L)	8 Ea (8 ea)	280-Packaging 1-1 - Pick Kit - B4B	5211548

M.U. 012470

Job Allocations

Operation	Component Part	Required	Inventory	Allocated
120-Skidtubes - 1	D3507-1-BENT	1	10	0
170-Skidtubes - 2 - B4B	D3504-1	2	120	0
	D3504-3	1	103	0
	D3504-5	2	6	0
	D3505-1	1	10	0
190-Skidtubes - 3 - B4B	D3506-1	4	13	0
	D3506-3	2	16	0
	MS20601-AD4W3	12	333	0
260-Handfinish - 4-1-Assembly-B4B	ALS4-1032-225	1	1,872	0
	ALS7-1032-130	38	1,652	0
	AN3C4A	31	584	0
	AN3C5A	2	680	0
	AN526C1032R10	2	57	0
	D2965	1	52	0
	D2965-3	1	45	0
	D3492-1	4	92	0
	D3492-3	4	50	0
	D3492-7	2	14	0
	D4918-047	1	4	0
	D4918-1	1	0	0
	D4918-3	1	4	0
	D4918-5	1	4	0
	NAS1149C0332R	33	2,974	0
	NAS1611-007	2	232	0
	NAS1611-010	4	131	0
	NAS1611-013	4	128	0
280-Packaging 1-1 - Pick Kit - B4B	AN3C4A	8	584	0
	D3512-041	2	0	0
	NAS1149C0332R	8	2,974	0

Part Specifications

Specifications could not be found.

Plex 9/19/19 9:36 AM Dart.lajeunesse.marie

Qty	Part Number	Description
X	D3507-041	SKIDTUBE ASSEMBLY
1	D2962-150	EXTRUSION
1	D2965	CAP
1	D2965-3	CAP
4	D3492-041	PLUG ASSEMBLY
4	D3492-043	PLUG ASSEMBLY
2	D3492-047	PLUG ASSEMBLY
2	D3504-1	CROSS BOLT SPACER
1	D3504-3	CROSS BOLT SPACER
2	D3504-5	CROSS BOLT SPACER
1	D3505-1	WEB
4	D3506-1	DOUBLER
2	D3506-3	DOUBLER
1	D4918-1	WEARPLATE
1	D4918-3	WEARPLATE
1	D4918-5	WEARPLATE
1	D4918-047	WEARPLATE
38	AELS-1032-130	INSERT
1	AELS-1032-225	INSERT
31	AN3C4A	BOLT
2	AN3C5A	BOLT
2	AN526C1032-10	SCREW
33	AN960C10L	WASHER
12	MS20601AD4W3	RIVET

D

SHOP COPY
RETURN TO
ENGINEERING
UNCONTROLLED COPY
SUBJECT TO AMENDMENT
WITHOUT NOTICE
WORK ORDER
NO. 2009 09
MCJ
19-09-19

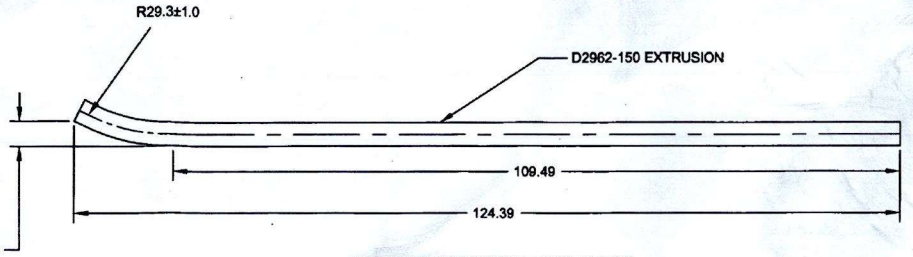

D3507-1 BENDING/CUTTING DETAIL

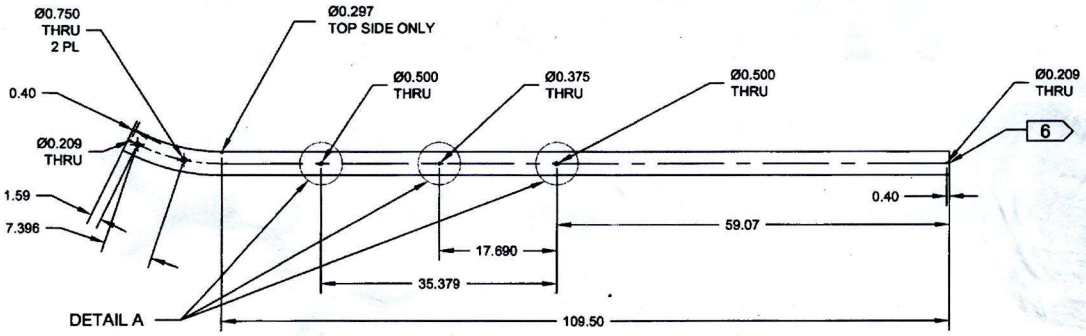

D3507-1 DRILLING DETAIL

GENERAL NOTES:

1) MATERIAL: N/A
2) FINISH: CHEMICAL CONVERSION COAT PER DART QSI 005 4.1 PRIOR TO INSERTING D3505-1 WEB.
   (D) STANDARD: PRIME (REF. 4.2.1.3.3) AND PAINT WHITE PER DART QSI 005 4.2.
   OPTIONAL: POWDER COAT WHITE (REF 4.3.5.1) PER DART QSI 005 4.3.
   BLACK ANTI-SKID PAINT AS INDICATED TO 1.00 ABOVE CENTERLINE PER DART QSI 005 4.4 (OPTIONAL)
3) TOLERANCES: PER DART QSI 018 UNLESS OTHERWISE NOTED
4) DIMENSIONS: INCHES UNLESS OTHERWISE NOTED
5) BREAK SHARP EDGES: 0.005 TO 0.010 MAX
6) IDENTIFICATION: IDENTIFY WITH DART B/N PER DART QSI 044 6.4 (VIBRATING STYLUS) ON I.D. OF TUBE.
7) WEIGHT: 24.1 LB (FROM IIN-D135-751)
8) WELDING TO BE DONE PER DART QSI 004
9) INSERT D3505-1 WEB TO LOCATION SHOWN OFF AFT END OF SKIDTUBE AND BOND WEB INTO OUTER TUBE WITH NON-STRUCTURAL SIKAFLEX-241/-291 ADHESIVE PER DART QSI 015 AFTER BENDING
10) USE DART DRILL TEMPLATE DT8868 TO LOCATE AND DRILL Ø0.297 HOLES (38 PLACES) FOR WEARSHOE INSERTS. INSTALL AELS-1032-130 PER SECTION C-C (38 PLACES) AFTER FINISH. SEAL WEARPLATE BOLTS WITH SIKAFLEX-241/-291.
11) DO NOT INSTALL AN3C4A BOLTS AND AN960C10L WASHERS IN INDICATED LOCATIONS

RELEASED
2013-12-18

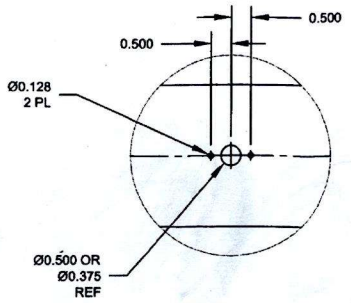

DETAIL A
TYP, 6 PL
SCALE 3:10

REV.	DESCRIPTION	BY	DATE
D	REMOVE D3558-X GASKETS, D4918-X WAS D3508-X REVISE FINISH TO ADD PAINT AS THE PREFERRED FINISH. REVISED NOTES	DW	13.08.30
C	ADD D3504-5, FOR SKID GEAR DEFLECTOR; CHANGE FWD CAP BOLT TO AN526C1032-10 SCREW	DC	07.09.19
B	ADD GASKET, CHANGE HARDWARE MAT'L	PH	06.11.01
A	NEW ISSUE	PH	06.04.21

DESIGN	DW	DART AEROSPACE USA, INC	
DRAWN	DW	KENT, WA	
CHECKED		DRAWING NO.	REV. D
MFG. APPR.		D3507	SHEET 1 OF 2
APPROVED		TITLE	SCALE
DE APPR.		EC 135 SKIDTUBE	NTS
DATE	13.08.30		

COPYRIGHT © 2013 BY DART AEROSPACE USA, INC
THIS DOCUMENT IS PRIVATE AND CONFIDENTIAL AND IS SUPPLIED ON THE EXPRESS CONDITION THAT IT IS NOT TO BE USED FOR ANY PURPOSE, OR COPIED OR COMMUNICATED TO ANY OTHER PERSON WITHOUT WRITTEN PERMISSION FROM DART AEROSPACE USA, INC

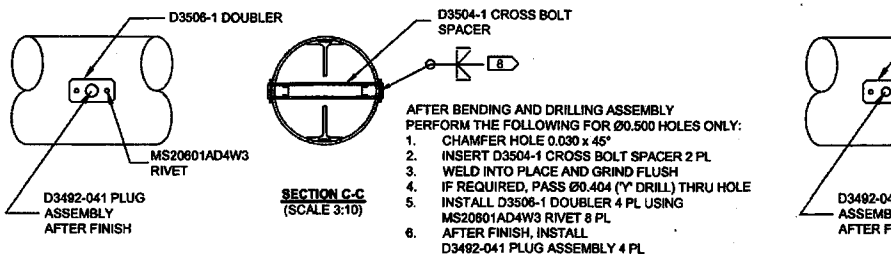

SECTION C-C
(SCALE 3:10)

AFTER BENDING AND DRILLING ASSEMBLY
PERFORM THE FOLLOWING FOR Ø0.500 HOLES ONLY:
1. CHAMFER HOLE 0.030 x 45°
2. INSERT D3504-1 CROSS BOLT SPACER 2 PL
3. WELD INTO PLACE AND GRIND FLUSH
4. IF REQUIRED, PASS Ø0.404 ('Y' DRILL) THRU HOLE
5. INSTALL D3506-1 DOUBLER 4 PL USING MS20601AD4W3 RIVET 8 PL
6. AFTER FINISH, INSTALL D3492-041 PLUG ASSEMBLY 4 PL

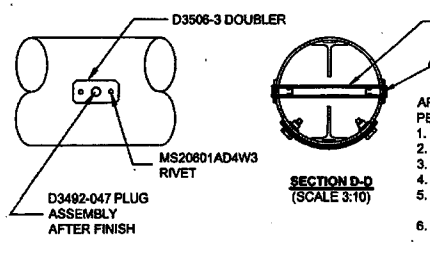

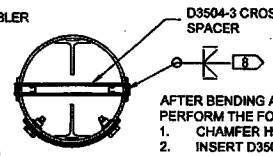

SECTION D-D
(SCALE 3:10)

AFTER BENDING AND DRILLING ASSEMBLY
PERFORM THE FOLLOWING FOR Ø0.375 HOLES ONLY:
1. CHAMFER HOLE 0.030 x 45°
2. INSERT D3504-3 CROSS BOLT SPACER 1 PL
3. WELD INTO PLACE AND GRIND FLUSH
4. IF REQUIRED, PASS Ø0.277 ('J' DRILL) THRU HOLE
5. INSTALL D3506-3 DOUBLER 2 PL USING MS20601AD4W3 RIVET 4 PL
6. AFTER FINISH, INSTALL D3492-047 PLUG ASSEMBLY 2 PL

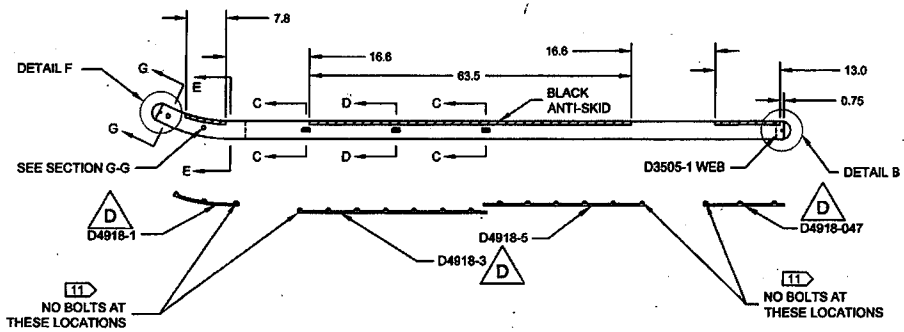

D3507-041 ASSEMBLY DETAIL

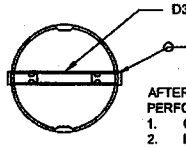

SECTION G-G
(SCALE 3:10)

AFTER BENDING AND DRILLING
PERFORM THE FOLLOWING FOR Ø0.750 HOLES ONLY:
1. CHAMFER HOLE 0.030 x 45°
2. INSERT D3504-5 CROSS BOLT SPACER 2 PL
3. WELD INTO PLACE AND GRIND FLUSH
4. IF REQUIRED, PASS Ø0.594 (19/32 DRILL) THRU HOLE
5. AFTER FINISH, INSTALL D3492-043 PLUG ASSEMBLY 4 PL

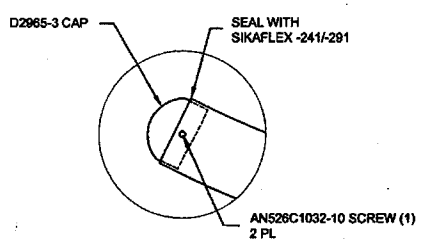

DETAIL F
(SCALE 1:5)

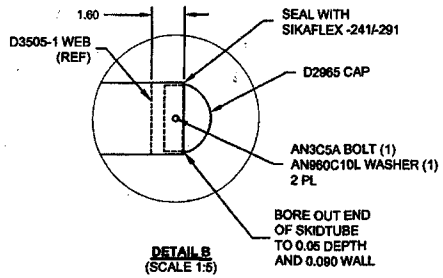

DETAIL B
(SCALE 1:5)

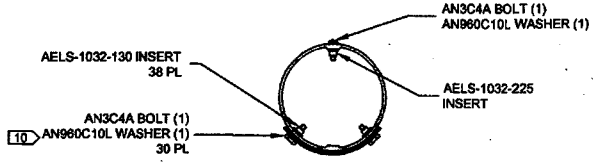

SECTION E-E
(SCALE 3:10)

RELEASED
2013-12-10

DESIGN	DW	DART AEROSPACE USA, INC KENT, WA
DRAWN	DW	
CHECKED		DRAWING NO. D3507 — REV. D — SHEET 2 OF 2
MFG. APPR.		
APPROVED		TITLE: EC 135 SKIDTUBE — SCALE: NTS
DE APPR.		
DATE	13.08.30	

COPYRIGHT © 2013 BY DART AEROSPACE USA, INC
THIS DOCUMENT IS PRIVATE AND CONFIDENTIAL AND IS SUPPLIED ON THE EXPRESS CONDITION THAT IT IS NOT TO BE USED FOR ANY PURPOSE OR COPIED OR COMMUNICATED TO ANY OTHER PERSON WITHOUT WRITTEN PERMISSION FROM DART AEROSPACE USA, INC.

5.0 PARTS LIST

Item	Qty -011	Qty -041	Qty -043	Qty -101	Part Number	Description
	X				**D135-751-011**	**SKIDTUBE INSTALLATION**
	1	X			**D135-751-041**	**REPLACEMENT SKIDTUBE**
			X		**D135-751-043**	**WEARPLATE KIT**
				X	**D135-751-101**	**SKIDTUBE EXTENSION KIT**
1		1			D3507-041	SKIDTUBE ASSEMBLY
2	4				**BRS8-96/48SZ-M8-W2	CLAMP
3	8				**LN9038-08032	SCREW
4		1			*D2965	CAP
5		1			*D2965-3	CAP
6		2			***AELS-1032-130	INSERT
7		2			***AELS-1032-225	INSERT
8		2			*AN3C5A	BOLT
9		2			*AN960C10L	WASHER
10		2			*AN526C1032-10	SCREW
20A		1	1		*D3508-1	WEARPLATE
20B		1	1		*D3558-1	GASKET
21A		1	1		*D3508-3	WEARPLATE
21B		1	1		*D3558-3	GASKET
22A		1	1		*D3508-5	WEARPLATE
22B		1	1		*D3558-5	GASKET
23A		1	1		*D3508-7	WEARPLATE
23B		1	1		*D3558-7	GASKET
24		38			*AELS-1032-130	INSERT
25	8	30	38		*AN3C4A	BOLT
26	8	30	38		*AN960C10L	WASHER
27	2		2		D3512-1	WEARPLATE
30		1			*AELS-1032-225	INSERT
31		1			*AN3C4A	BOLT
32		1			*AN960C10L	WASHER
40		4			*D3492-041	PLUG ASSEMBLY
41		4			***NAS1611-010	O-RING
42		2			*D3492-047	PLUG ASSEMBLY
43		2			***NAS1611-007	O-RING
44		4			*D3506-1	DOUBLER
45		8			*MS20601AD4W3	RIVET
46		2			*D3506-3	DOUBLER
47		4			*MS20601AD4W3	RIVET
48		4			*D3492-043	PLUG ASSEMBLY
49		4			***NAS1611-013	O-RING
50				1	D3510-041	INSERT ASSEMBLY
51				2	***AELS-1032-130	INSERT
52				6	***AELS-1032-225	INSERT
53				2	***ALS4-428-165	INSERT
54				2	AN4C7A	BOLT
55				2	AN960C416L	WASHER
56				2	AN3C4A	BOLT
57				8	AN3C7A	BOLT
58				10	AN960C10L	WASHER

* PART IS INCLUDED WITH D3507-041 SKIDTUBE ASSEMBLY
** TO BE SUPPLIED BY CUSTOMER, LISTED AS REFERENCE ONLY
*** DENOTES PART IS INCLUDED WITH ASSEMBLY ABOVE

• COPYRIGHT © 2006 BY DART AEROSPACE USA, INC •
THIS DOCUMENT IS PRIVATE AND CONFIDENTIAL AND IS SUPPLIED ON THE EXPRESS CONDITION THAT IT IS NOT TO BE USED FOR ANY PURPOSE OR COPIED OR COMMUNICATED TO ANY OTHER PERSON WITHOUT WRITTEN PERMISSION FROM DART AEROSPACE USA, INC.

Entered: _____ Date: _____

DART AEROSPACE

WORK ORDER NON-CONFORMANCE / ROUTE UPDATE

NCR No.

Route update only ☐

Job: _____

Part No. _____

DISPOSITION

Rework ☐
Scrap ☐
Use-as-is ☐

DEPARTMENT/PROCESS

Skid-tube ☐ Cross tube ☐ Eng. (Non-AW) ☐ Engineering ☐
Machining ☐ Small Fab ☐ Prod. Eng. Coor. ☐ Water Jet ☐
Large Fab ☐ Finishing ☐ Rec/Store/Packaging ☐ Supplier ☐
Quality ☐

Date :	Sequence #:	QTY Affected :	MRB (QSI042)

Description Work Order Deviation	Disposition	Completed By
		Lead hand / Supervisor
		QC / QA Coordinator

Root Cause

Operator ☐
Manufacturing Process ☐
Equip/Tooling ☐
Handling/Presservation ☐
Material ☐
Product Improvement ☐
Process Improvement ☐
Human Factors ☐

FAULT CATEGORY

☐ Pressure/Forced ☐ Contamination ☐ Power Loss/Surge ☐ Positioned Wrong
☐ Bending ☐ Misaligned/off center ☐ Folio/Program ☐ Outside Tolerance
☐ Crushing ☐ BOM/Route ☐ Grain Direction ☐ Drawing
☐ Cracks ☐ Broken/Damage/Defect ☐ Weld ☐ Finish
☐ Crimp/Kink/Ripple/Wave/Twist ☐ Incomplete/Unclear Instructions ☐ Wrong Stock Pulled ☐ Part Lost/Missing
☐ Marks/Chatter ☐ Drill Holes ☐ Out of Sequence ☐ Misread
☐ Mislabeled ☐ Fit/Function ☐ Off-set/Set-up

Other/Details:

11:27 - 1200 - 33

~~+50~~

12:33 - 218 - ~~2:09~~ ~~1:25~~ 45

1:45

2:18